SNOWGUARDWAREHOUSE.COM
143 Forest Ln, Grove City, PA 16127
Ph: 814-786-9085
Email: Mail@JosephJenkins.com

Snow-Bird Snow Guard Installation Instructions

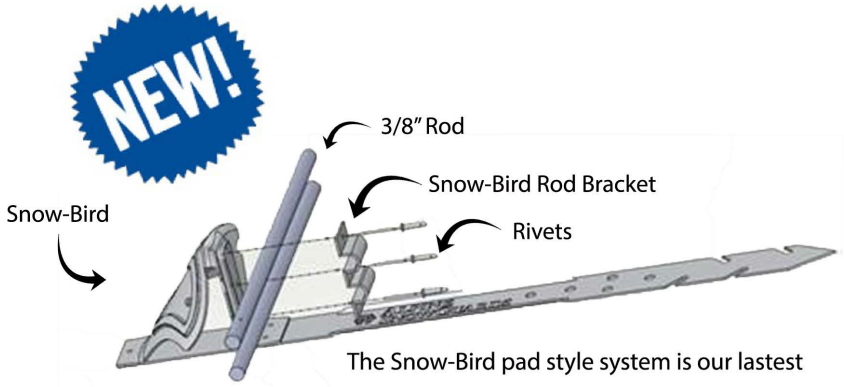

The Snow-Bird pad style system is our lastest innovation of hybrid design. Much like the Fusion-Guard, it allows the installer the ability to add snow rod as needed!

NOTE: *At its core, the Snow-Bird is a pad-style snow guard system. The ability to add rods is a benefit that no other snow guard on the market can accommodate. However, rods are optional and are to be used at the discretion of the installer or end user. The optional rods are not quoted unless requested. It is the responsibility of the purchaser to specify quantities required to meet the project needs. Page 3 provides a guideline for the optional rods.*

Typical Roof Types:*

*Available for majority of roof types. Custom strap lengths and attachment options may vary.

New Roof Installation

1. Install the first 3 rows of shingles, and place the strap of the snow guard on the roof deck (*fig. A*). **Note:** It is acceptable to install closer to the eave on synthetic shingle, composition shingle and metal. **Note:** When installing on 3-tab shingles, lay the Snow-Bird on top of the shingle, centering on the keyway between shingles.
2. Place the snow guard low enough on the shingle to leave a minimum gap of 5/8", or at least 3 times the thickness of the shingle, whichever is greater, from the shingle above (*fig. B*).
3. Use a minimum of 2 fasteners of a material compatible with the snow guard and the roof system to attach the snow guard.

Existing Roof Installation (Retrofit)

1. Slide the snow guard up and between the rows of shingles, positioning the strap so it hooks onto one of the fasteners in the shingle above. Pull down into place so the snow guard is well-seated.
   NOTE: It may be necessary to repeat step 1 until the snow guard "hooks" properly. The top of the pad should be placed to leave a minimum gap of 5/8", or at least 3 times the thickness of the shingle, whichever is greater, from the shingle above (*fig. B)*.

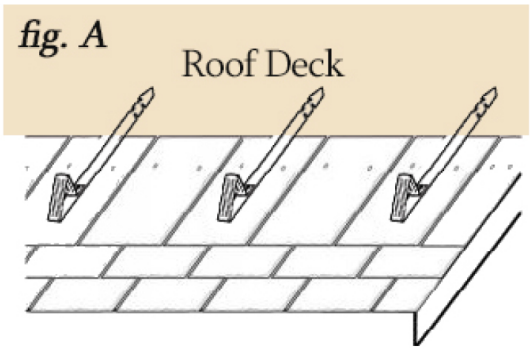

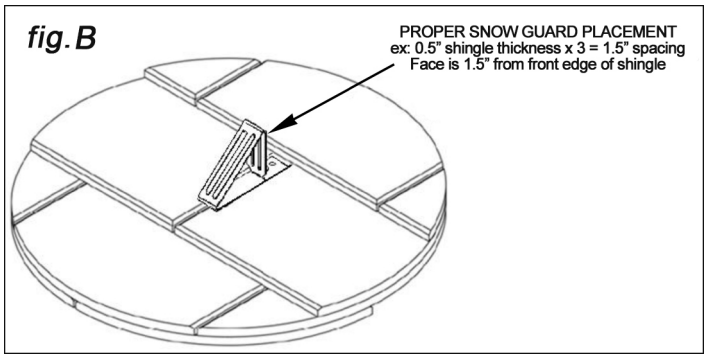

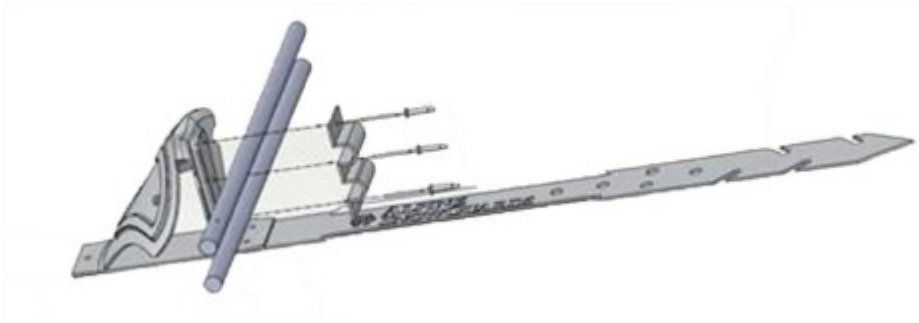

Rod Installation

1. Fasten the Snow-Bird Rod Bracket to the face of the snow guard using the 3 rivets.
2. Insert 3/8" rod (RD77).
3. On runs longer than 6', join rods with external couplings (RD87).
   NOTE: Rod style snow guards must have a break in the assembly every 48' of eave length to allow for thermal expansion.
4. Locking collars (RD65) should be placed over the end of each run of rod, on the inside of the outermost brackets. End collars should be installed 1/2" from bracket.
5. Optional ice flags (RD95) are available.

SNOWGUARDWAREHOUSE.COM, 143 Forest Ln, Grove City, PA 16127; Ph: 814-786-9085; Email: Mail@JosephJenkins.com

Snow Guard Layout

IMPORTANT: All layouts begin with a 3-row pattern. Estimated quantities provided include 3-row pattern. If you have any questions, please contact us at 888-766-4273.

Please use the guidelines below to determine the appropriate layout for your installation.

PAD LAYOUT GUIDELINES

Layout	Rafter Length	Ground Snow Load	Roof Pitch	Est. Snow Guard Qty	Spacing
3-Row Pattern	15' or less	75 psf or less	16/12 or less	17 per 10' of eave	3 rows, 24" on center horizontally with the middle row staggered 12". Rows vertically spaced every other course.
4x2 Pattern	15' or greater	75 psf or less	16/12 or less	12 per roofing square	Space rows 4' vertically and 2' horizontally to within 10' of the ridge
3x2 Pattern	Any	75-110 psf	16/12 or less	18 per roofing square	Space rows 3' vertically and 2' horizontally to within 10' of the ridge
2x2 Pattern	Any	111-150 psf	16/12 or less	24 per roofing square	Space rows 2' vertically and 2' horizontally to within 10' of the ridge

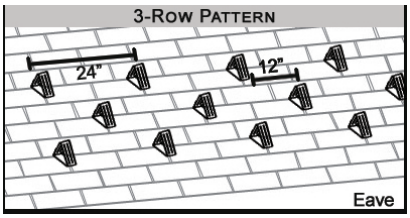

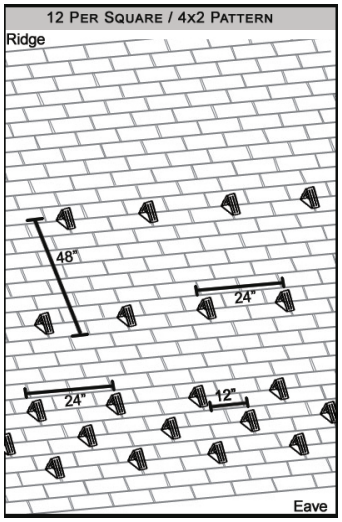

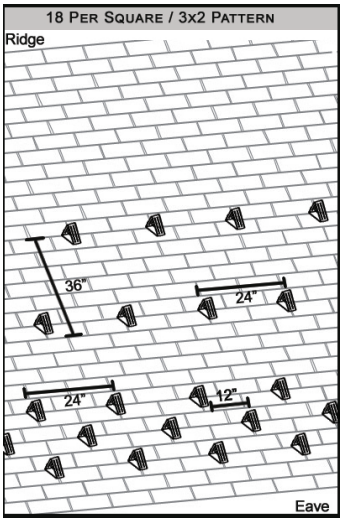

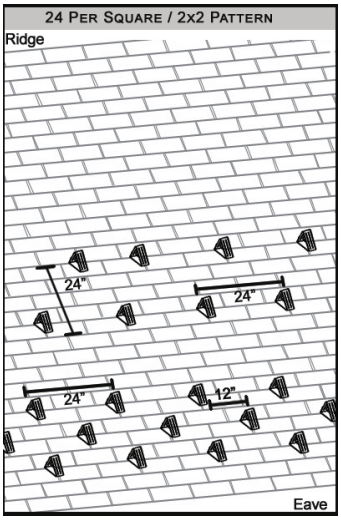

OPTIONAL ROD LAYOUT GUIDELINES

Roof Pitch	Alpine SnowGuards' Guideline*
8/12	Rods installed at least on lowest row of pads
9/12	Rods installed at least on lowest 2 rows of pads
10/12	Rods installed at least on lowest 3 rows of pads
Over 10/12	Rods installed on all rows of pads

*Performance will vary with roof pitch, snow loads, density of snow, etc. Some areas may require more rods than others. The number of rows installed is at the discretion of the end user. If the above rod layouts do not meet your desired performance, additional rows of Fusion-Guard may be installed.

SNOWGUARDWAREHOUSE.COM, 143 Forest Ln, Grove City, PA 16127; Ph: 814-786-9085; Email: Mail@JosephJenkins.com